# Combustion Turbine Repowering of Reheat Steam Power Plants

By
R. W. Foster — Pegg
Westinghouse Electric Corporation
Combustion Turbine Systems Division
Concordville, PA

*Originally Presented at the Pacific Coast Electric Association*
*San Francisco, California — March 1980*

Westinghouse Combustion Turbine Systems

The Ready Source of Power.... Worldwide

## INTRODUCTION

Repowering implies Conversion of Conventional Reheat power plants to Combined Cycles by the addition of Combustion Turbines. The primary objective is an improvement of efficiency which can be as much as 20 percent.

An increase in capacity is generally a secondary objective.

Repowering provides the benefit of more kilowatt hours for the same quantity of fuel. In these days of fuel conservation, this is particularly important in situations where existing steam turbine generating units will be required to operate on premium fuel into the 1990s before they are retired or replaced.

Repowering of non-reheat steam plants is generally more familiar as a result of many examples in operation and many technical papers on the subject and generally involves replacing the conventional boiler with an unfired (or lightly fired) heat recovery boiler. (Ref.1)

This paper addresses the repowering of reheat steam power plants which are all of fairly recent construction with many years of remaining useful life.

The reheat steam conditions are unattainable in unfired heat recovery boilers and the discard of costly serviceable boilers cannot be justified. Repowering of reheat plants is thus fashioned around the use of the existing boilers.

Much of the background for this paper was developed during a study of reheat repowering commissioned by EPRI and documented in reference 2.

## WHY REPOWER WITH A COMBUSTION TURBINE

There are many reasons for repowering a steam power plant with a combustion turbine and circumstances related to the specific installation will affect the optimum solution. Basic reasons for repowering may include:

- Efficiency improvement resulting from repowering.
- Increase in capacity at existing sites.
- Increase in capacity without increase in cooling water requirement.
- Shortage of new sites for new power plants.
- Air pollution difficulties with the existing plants.
- Minimum environmental impact of the repowered plant.
- Avoidance of cost, difficulty and delay involved in approval of new sites.

- Boiler plant in need of extensive overhaul or replacement.

Considerations related to the specific plant to be repowered which will influence choice of the optimum system may include:

- Size of the steam plant to be repowered.
- Steam cycle arrangement and steam conditions.
- State of repair of the conventional boilers
- Acceptable outage time for conversion.
- Capacity of additional power required.
- Available fuels and cost.
- Expected utilization of the repowered plant.
- Space available at the station.

Before getting into the discussion of specific repowering schemes, a word of caution is in order. Steam power plants have an infinite number of variations. The variations include obvious ones like different power, flow and steam conditions, but also include less obvious differences in loadings and margins within the equipment. Differences in the boiler feedpump-heater-deaerator arrangement are also significant. These differences require that each candidate plant for repowering must be separately evaluated for repowering potential.

Plants with low boiler gas velocities and low steam turbine exhaust loadings offer the greatest potential for repowering uprating. In this paper, the quoted results refer to repowering of typical plants with typical margins, and the repowered performance and cost of specific plants may differ from this normal.

## GENERAL CONSIDERATIONS

In a repowered plant exhaust from the combustion turbine or boiler is cooled against feedwater in an additional economizer. The high pressure heaters may be retained with some or all of the water diverted thru the additional economizer called a Stack Gas Cooler. Less extraction steam is required for the reduced feedwater flow thru the extraction heaters and the steam released from this duty expands to the condenser producing from 5 to 15 percent more power in the steam turbine.

The steam diverted to the condenser is from 10 to 25 percent of the throttle flow. The amount of heating which can be performed in the stack gas

cooler is dependent on the steam turbine exhaust end loading and stress considerations in the steam turbine. It may be desirable to reduce the throttle flow to limit the increase in flow to the condenser.

Combustion turbine exhaust is typically 900-1000$^{o}$F and can be used to raise steam without combustion of additional fuel. Alternately, additional fuel can be burned in the combustion turbine exhaust to increase the gas temperature and raise more and hotter steam.

Systems both with and without supplementary firing in the combustion turbine exhaust may offer the best solution, depending on circumstances and both systems are in common use.

The choice between systems using the existing and new boilers with and without refiring may be influenced by many factors which we will discuss. First, the unfired boiler system.

Without supplementary combustion, steam can be heated to about 50$^{o}$F, less than the temperature of the combustion turbine exhaust.

With an unfired boiler, a combustion turbine of twice the steam plant capacity provides the most efficient match and the repowered plant will produce three times the output of the original plant.

Heat recovery boilers associated with gas turbines are generally limited to convection heat transfer (no water walls) thus supplementary firing in the boiler does not exceed 1500$^{o}$F.

With this level of firing in combined cycles the steam and combustion turbine power are about equal.

Gas temperature in conventional boilers exceeds 3000$^{o}$F; whereas the temperature of combustion turbine exhaust is about 1000$^{o}$F. To produce the same quantity of steam in an unfired boiler as in a conventional boiler, the quantity of combustion turbine exhaust may be five times the normal quantity of boiler combustion products. Because of the lower temperature and the greater quantity of combustion turbine exhaust, the original boiler is unsuitable as an unfired boiler and must be discarded.

Unfired boilers are not practical for repowering reheat plants because of the multiplicity of combustion turbines and their unfired boilers which would be required and the inability to achieve the design steam temperatures. For example repowering a 300 MW steam plant would require six of the largest combustion turbines with unfired boilers.

The boilers of the larger, more recent power plants have many years of useful remaining life and represent too large an investment to be discarded. Repowering of these plants requires that the existing boilers be used and adapted to accept the combustion turbine exhaust in place of fresh air.

## REPOWERING USING EXISTING BOILERS

The heat in the exhaust of a combustion turbine may be used to heat the feedwater of a steam power plant as shown in Figure 1. In this arrangement, an economizer is incorporated in parallel with the high pressure feedwater heaters. A portion of the feedwater is heated in the economizer, releasing steam normally used in the heaters to expand to the condenser.

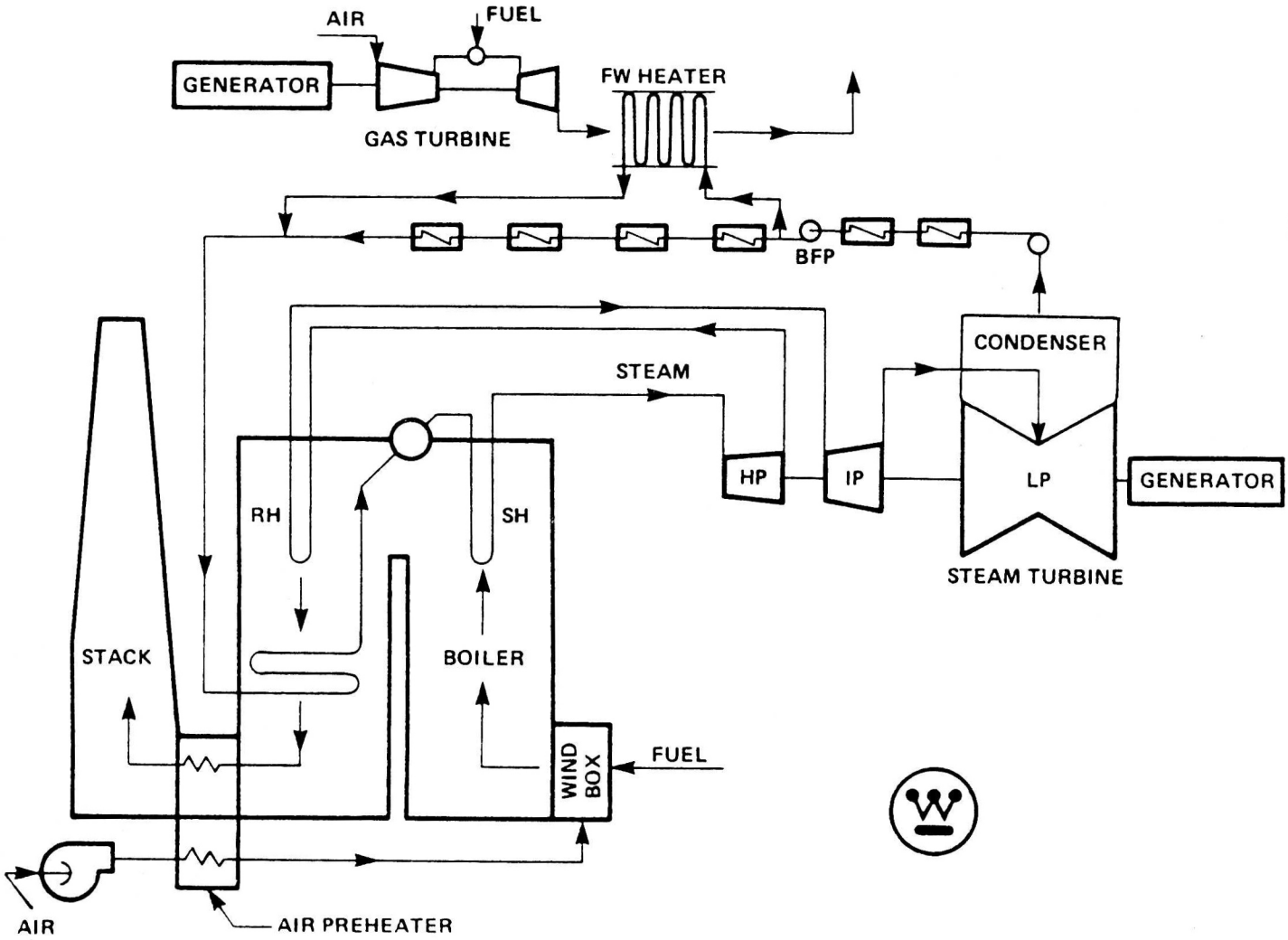


Figure 1 Reheat Steam Plant Repowered By Use Of Combustion Turbine Exhaust To Heat Feedwater

Additional power is produced by the combustion turbine and by the steam diverted from the heaters now expanding to the condenser. The combined additional power is limited by the feedwater flow to 25 percent of the original steam plant power.

The addition of a combustion turbine with heat recovery for feedwater heating does not materially change the station heat rate. The discharges from exhaust stacks of the steam and combustion turbine are separate and additive and air pollution is not reduced, compared to the separate operation of the combustion turbine and the steam plant.

The feedwater heating system is simple to implement and many examples are in service. The lack of improvement in efficiency or emissions omits the main incentives for repowering in our present scenario.

The exhaust of modern combustion turbines contains two-thirds of the oxygen in air and is capable of supporting combustion of additional fuel. Many combined cycles are in service with fuel fired in the exhaust of combustion turbines.

As the gas turbine exhaust is hot there is no use for the conventional air preheater which is discarded. In place of the air preheater a stack gas cooler recovers heat from the boiler exit gas by heating feedwater.

For satisfactory operation of the existing boiler, furnace temperatures must approach conventional operation, thus the boiler must operate with low excess air. Repowering with existing boilers results in combined cycles with highly-fired boilers in contrast to repowering with replacement of the boilers and current new combined cycles, which have unfired or lightly-fired boilers.

The oxygen content of the combustion turbine exhaust is only two-thirds the oxygen content of fresh air and only two-thirds of the normal quantity of fuel can be burned in combustion turbine exhaust compared to fresh air.

This is somewhat compensated by the hotter combustion turbine exhaust compared to preheated air but even so, the gas flow through the boiler must be increased about 30 percent to raise the full normal steam quantity within the boiler.

The exhaust temperature of combustion turbines is in the range of $900^{o}$-$1000^{o}F$. The windboxes and burners of existing boilers are designed for air

temperatures of 500 - 600$^{o}$F, and are unsuitable for operation at appreciably higher temperatures.

The increased flow required through the boiler and the higher windbox temperature result in considerably higher windbox and burner volume flow which may not be acceptable. The windbox may be reconstructed with higher temperature materials, more insulation and increased area to accommodate the larger volume of higher temperature exhaust gas. This is the Hot Windbox system shown on Figure 2.

An alternative is to cool the combustion turbine exhaust in a supplemental boiler between the combustion turbine and the windbox so the existing windbox

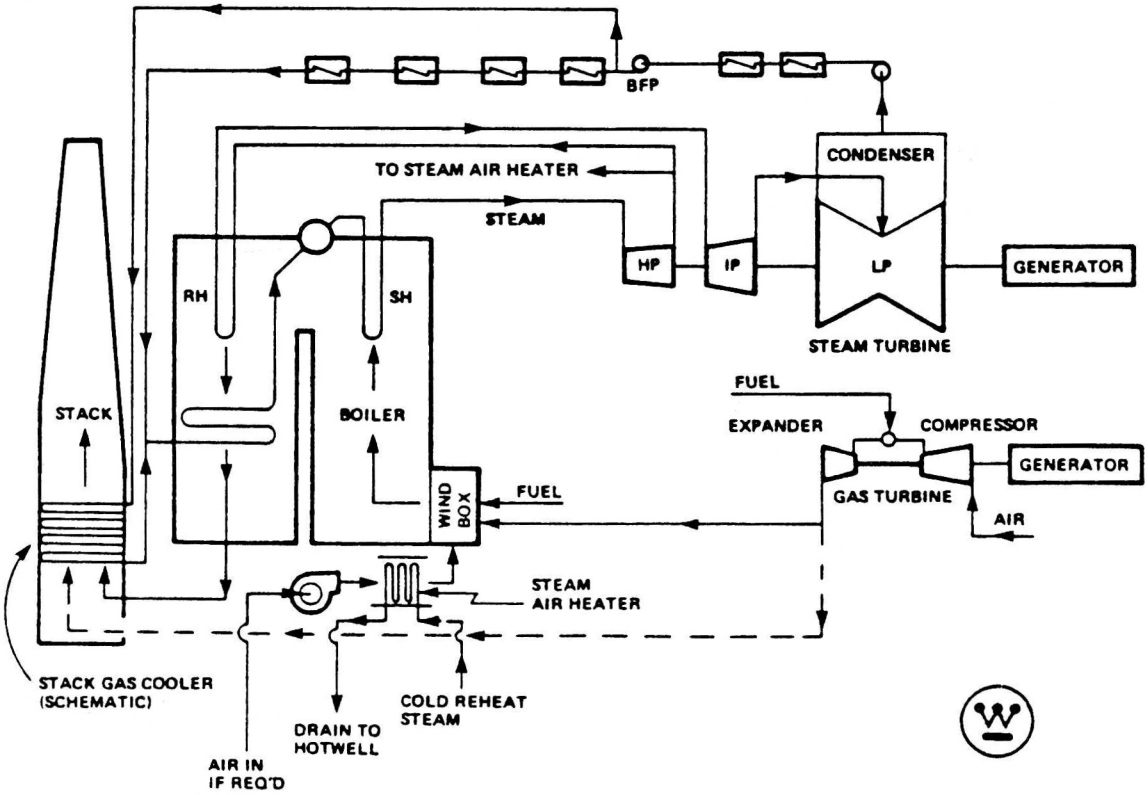


Figure 2 Repowered Reheat Steam Power Plant - Hot Windbox Configuration

can be retained. The supplemental steam is introduced into the main boiler for final superheating as shown on Figure 3.

It has been explained that production of full steam flow in the main boiler requires a greater flow of combustion turbine exhaust than of fresh air. Pressure drop is proportional to the second power of flow and this and other considerations may not allow flow through the boiler to be sufficiently increased. Additional steam can be raised in the aforementioned supplemental boiler, if additional exhaust gas is passed through the supplemental boiler and directly to the stack gas cooler. A gas flow through the boiler can be bypassed in this

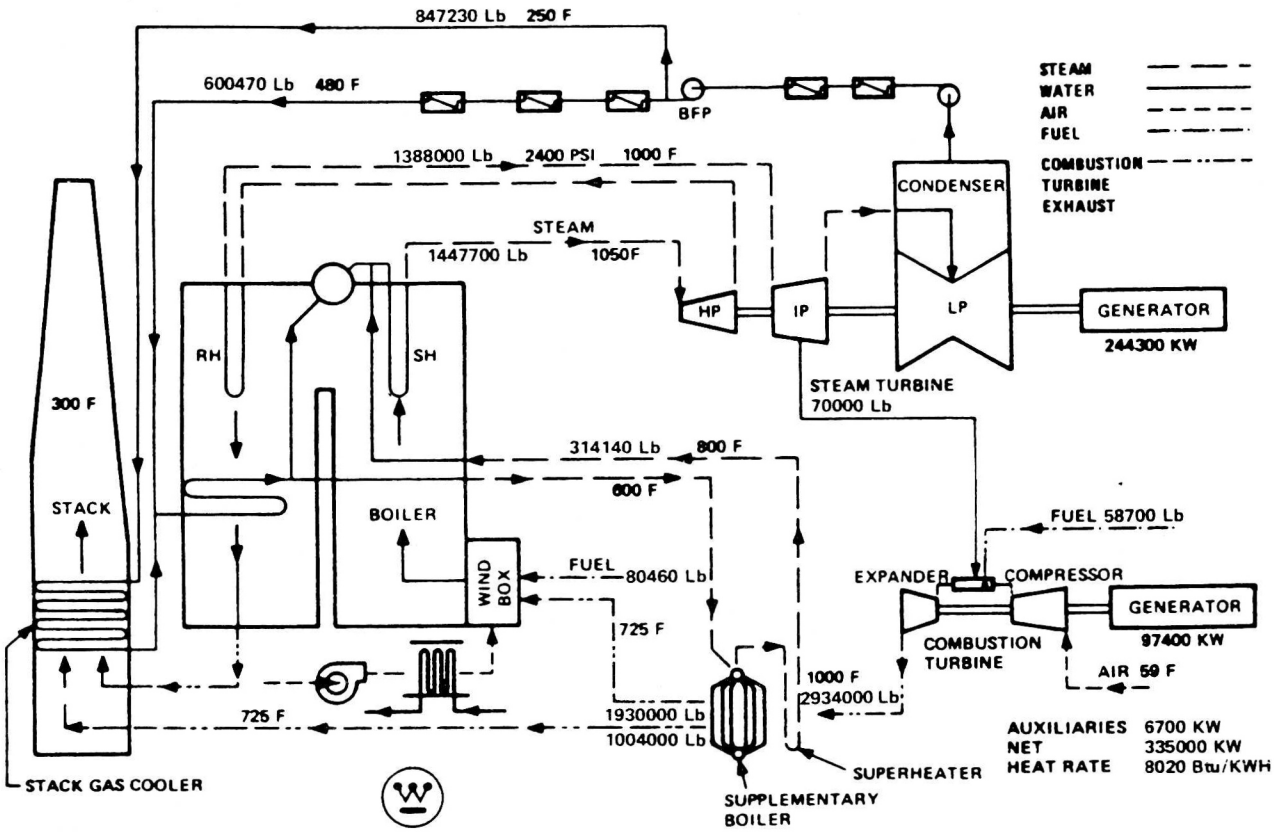


Figure 3 Reheat Steam Repowered With 501 Combustion Turbine And Supplementary Boiler

way. The ability to bypass gas around the boiler will be required for part load operation whether or not there is gas surplus to the boiler requirement at full load. A cycle diagram for this arrangement as applied to a 220 MW conventional plant using one W501 combustion turbine is shown on Figure 3.

Sixty-six percent of the combustion turbine exhaust flows thru the main boiler and 34 percent is bypassed to the Stack Gas Cooler.

The physical arrangement applied to a 350 MW conventional plant with two 501 combustion turbines is shown on Figure 4.

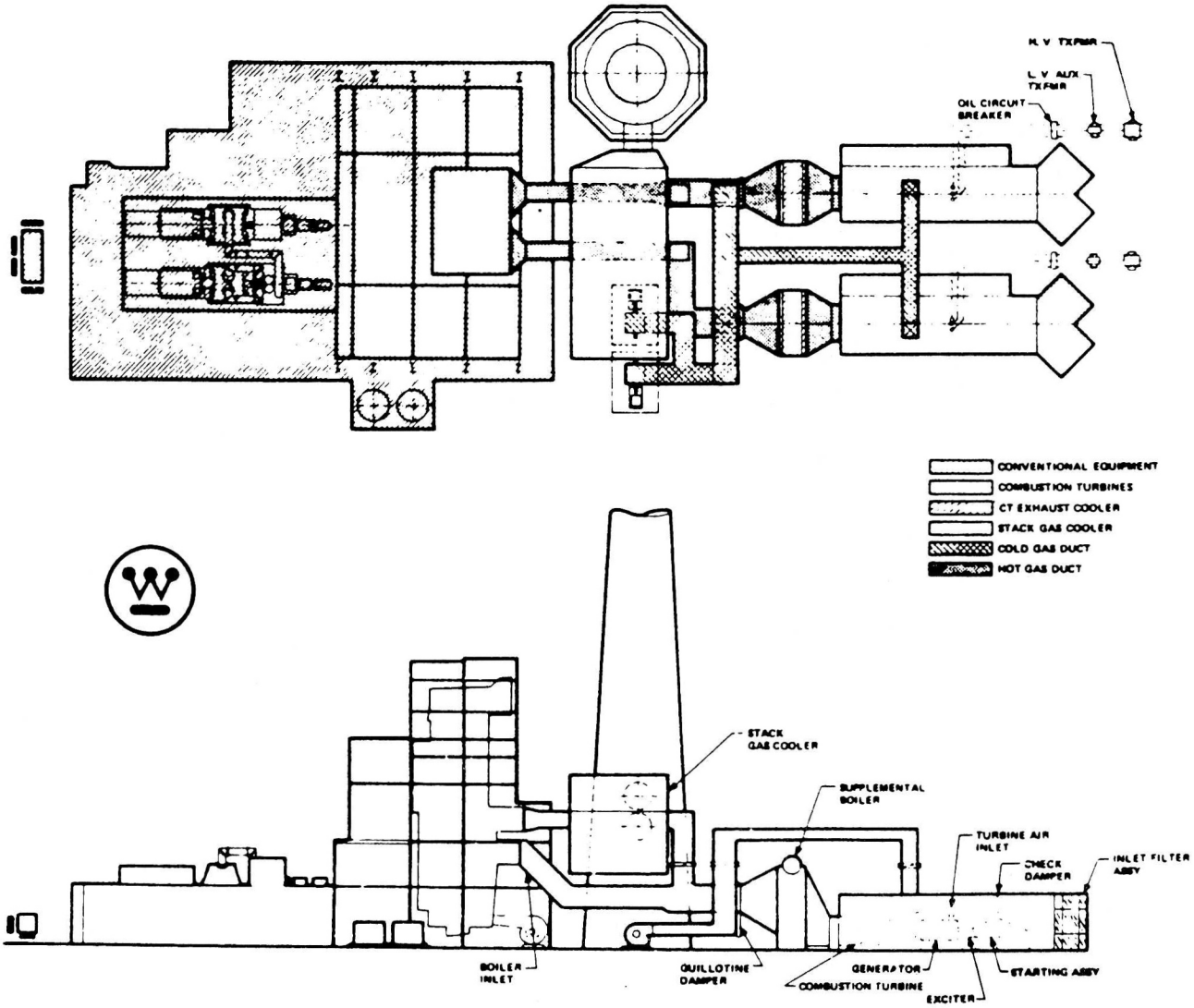


Figure 4 Arrangement Of A Power Plant Repowered With Two Combustion Turbines

The system with supplemental boiler provides a little better performance than the Hot Windbox system and better matches the existing boiler. The supplemental boiler arrangement is the preferred system and the following discussions relate to this system unless stated otherwise.

REPOWERED REHEAT STEAM PLANT PERFORMANCE

The air flow required by an existing reheat steam boiler just matches a combustion turbine producing 25 to 30 percent of the conventional plant power.

The corresponding reduction in steam extraction for feedwater heat will produce additional 5 percent power for a total power increase of 30 to 35 percent.

Larger combustion turbines with capacity up to 60 percent of the conventional plant capacity can be added with the exhaust gas in excess of boiler requirements bypassing the boiler. With this large gas flow, most of the feedwater will bypass the extraction heaters and steam power will increase by up to 10 percent. The total capacity added by repowering in this case is 70 percent.

Generally, heat rate of a plant will improve as combustion turbine capacity is increased as shown in Figure 5. In the case depicted, the boiler flow is just satisfied by a combustion turbine of 29 percent of conventional plant capacity, which results in a heat rate reduction of 800 Btu/KwHr. For lesser

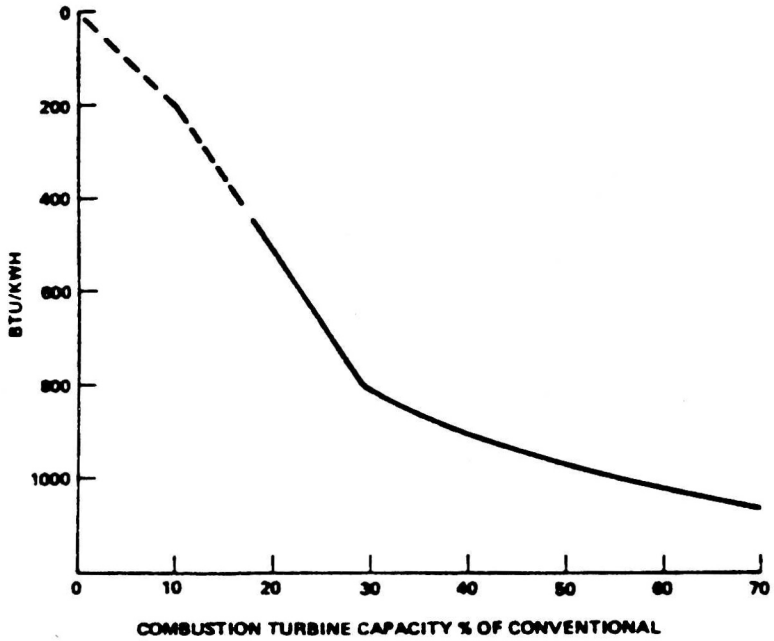


Figure 5 Heat Rate Improvement Versus Combustion Turbine Participation

combustion turbine capacities, some air must be supplied by fan and the heat rate significantly deteriorates.

Combustion turbines with capacities above the boiler matching flow progressively improve the heat rate by up to 1060 Btu/KwHr. In the case illustrated (Figure 3), the combustion turbine capacity is 44 percent of the conventional plant before repowering and the heat rate improvement is 940 Btu/KwHr.

The heat rates for the load range of a plant before and after repowering are compared on Figure 6.

The combustion turbine capacity is about 30 percent of the conventional plant and air flow is matched at full load.

As load is reduced the heat rate of the repowered plant improves and at about 50 percent load the heat rate improvement increases by 400 Btu to 1200 Btu per Kw/Hr.

Below 28 percent load the repowered plant heat rate has exceeded the conventional plant and for extended operation below 25 percent load efficiency would be improved if the gas turbine were shut down.

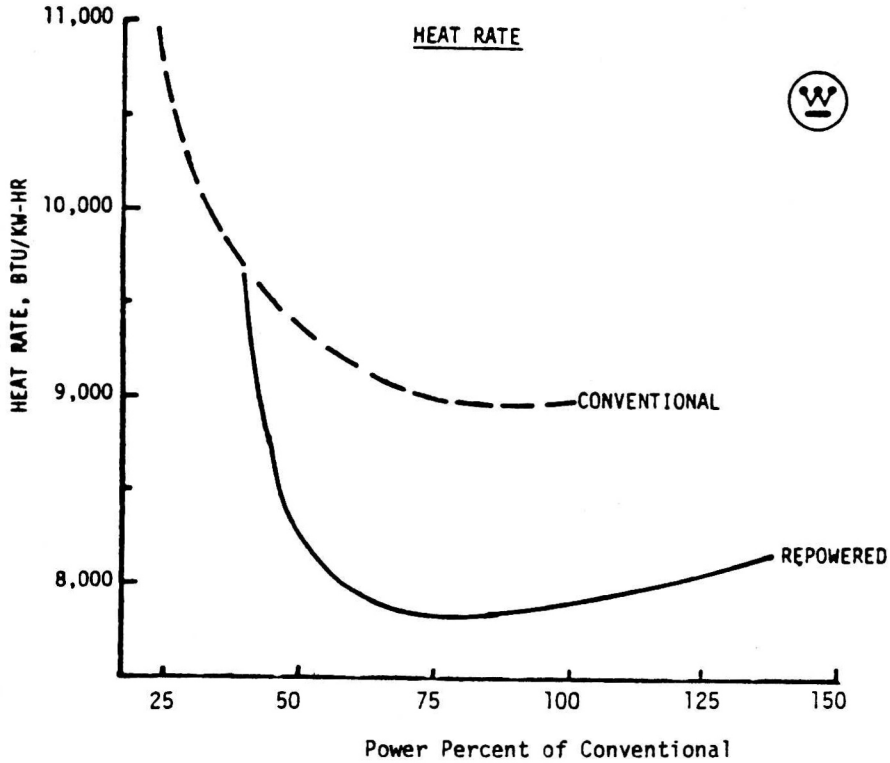


Figure 6 Heat Rate Versus Load

The preceeding discussion of part load performance relates to the supplemental boiler repowering system.

Performance of the hot windbox repowered system is the same when combustion turbine flow matches the boiler requirement (full load on Figure 6) but would be about 200 Btu/KwHr less efficient at half load.

The air flow thru a combustion turbine decreases with increase in ambient temperature and it is beneficial for some combustion turbine exhaust to bypass the main boiler at normal ambient temperatures so the exhaust flow will be adequate for combustion in the boiler at high temperatures.

For conventional operation after repowering, boiler fans are retained. With the large Stack Gas Cooler, a low stack temperature is obtained and power and efficiency without the gas turbine are approximately the same as the conventional plant before repowering.

## OPERABILITY

To ensure that an aberration in the combustion turbine will not take out the complete plant it is necessary that an alternate source of boiler combustion air be instantly available.

To meet this criterion, a forced draft fan must be in operation continuously.

Rather than have the fan running against closed dampers and drawing power to no useful purpose the fan can be usefully employed supercharging the gas turbine as shown on Figure 7.

The supercharge of the gas turbine intake offsets the detrimental effect of the boiler draft loss and increases gas turbine power because of the increased air density and flow thru the machine.

In a case of repowering a 300 MW power plant with a Westinghouse 501 combustion turbine pressurizing the inlet of the combustion turbine to 70" water in conjunction with evaporative cooling improves plant performance as in table I.

TABLE I

| | | |
|---|---|---|
| Supercharge "W | 0 | 70 |
| Net Power KW | 441703 | 460610 |
| Heat Rate Btu/KwHr | 8290 | 8202 |

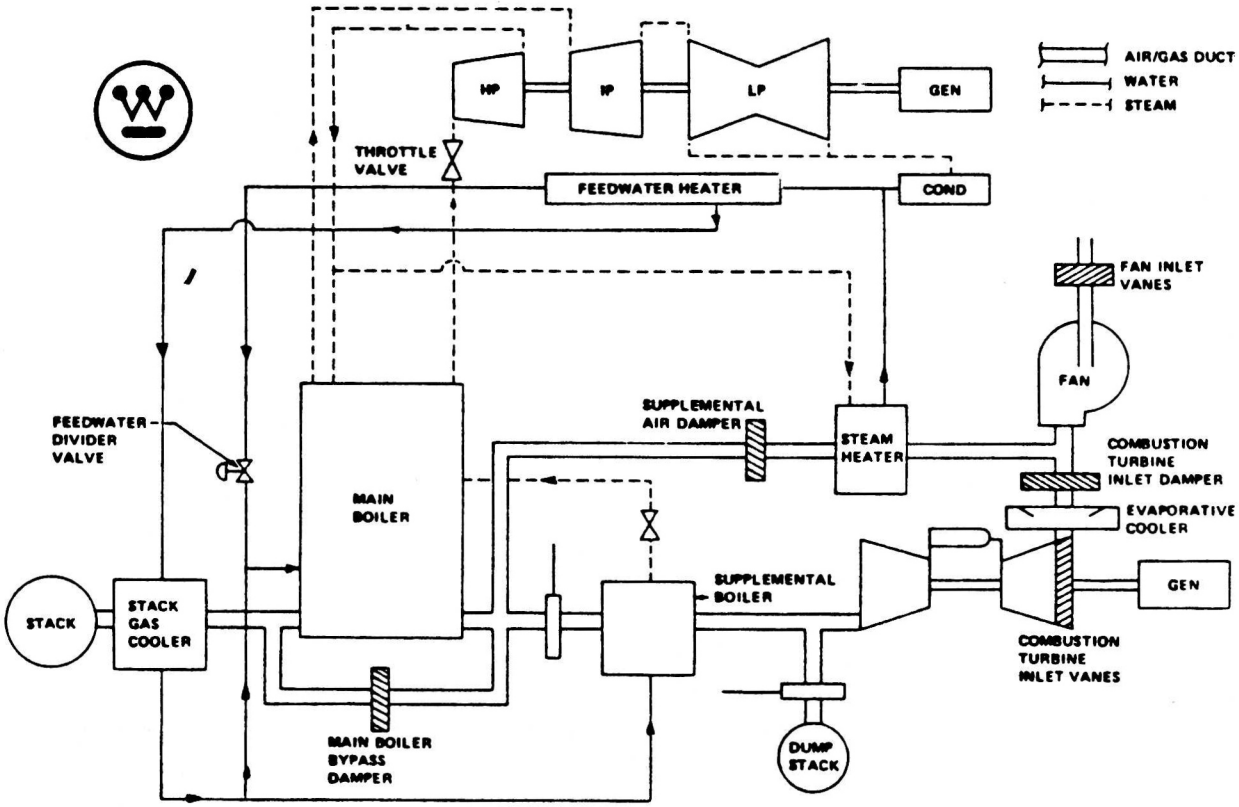


Figure 7 Duct Damper And Fan Schematic For Repowered Plant

The negative pressure drop thru the combustion turbine produced by supercharging allows the combustion turbine to be started and stopped while exhausting to the boiler. This avoids the need to transfer the exhaust of the gas turbine between the boiler and the bypass stack at each start and stop of a gas turbine.

With the large cumbersome dampers which are involved it is impossible to consistently make this transfer without tripping the whole plant. With supercharging this transfer is unnecessary.

Supercharging allows multiple gas turbines supplying a single boiler to be separately started and stopped without risk of tripping the steam plant or the gas turbines which continue in service.

The combustion turbine can be cranked to start by the supercharge fan alone. Supercharging while cranking with the normal starter motor reduces the temperature and thermal stress in the turbine during starting with benefits to life and cost of maintenance.

Supercharging can increase airflow thru a combustion turbine by 20 percent allowing a given frame to be matched with larger steam plants and providing an increase in air flow at high ambient temperatures to maintain steam turbine and plant output when combustion turbine airflow normally declines.

## EMISSIONS

A repowered plant will respond to all methods for control of emissions applicable to other fossil fuel power plants. For control of sulfur emissions the repowered plants under consideration generally depend on use of low sulfur fuel.

For control of $NO_x$ repowering takes advantage of staged combustion which occurs naturally first in the combustion turbine followed by combustion in the boiler.

Injection of steam into the combustion turbine additionally reduces $NO_x$.

An investigation of emissions likely from repowered plants with fired boilers made by KVB for EPRI (Reference 3) predicted low emissions as a result of the inherent combustion in two stages.

Combined cycles with fired boilers in operation have demonstrated low $NO_x$ emissions. Repowering with lower combustion turbine participation benefits most from staged combustion and will emit least $NO_x$.

## REHEAT PLANT REPOWERING COSTS

The cost of repowering reheat steam plants using the existing boiler is generally $250 - $350 per incremental KW. A breakdown of the costs is given in Table II for a plant of about 300 MW. The combustion turbines and boiler modifications with additions are the major cost items at about $100 per KW in each category.

Steam turbine modifications can cost from $5.00 to $25.00 per KW, depending on the margins in the existing turbine.

The lead time required for repowering will be about three years, and represents the time required to design the repowering, manufacture, modify and erect all the components. Erection time will be about one year during most of which the comventional plant can remain in service. Outage of the plant for final overhaul, tie-in of the repowering equipment and changeover to combined cycle will require from 3 to 6 months. The costs include additional fuel used by less efficient capacity during the changeover.

TABLE II

| | $ per KW |
|---|---|
| Combustion Turbine | 110 |
| Steam Turbine | 20 |
| Existing Boiler | 40 |
| Stack Gas Cooler and Supplemental Boiler | 40 |
| Fans, etc. | 5 |
| Ductwork | 10 |
| Fuel Storage, Site Work, Stack Modifications | 10 |
| Control | 5 |
| Outage Penalty | 10 |
| Total Above | 250 |

Engineering, Administration Interest During Construction 21 percent

Total = 250 x 1.21 = $302.6/KW

## ECONOMIC CONSIDERATIONS

Some hypothetical scenarios will be considered to illustrate potential economics of repowering reheat power plants. The capacity of the repowered plant is assumed to be 140% of the conventional plant before repowering thus for each KW of the conventional plant which is upgraded 0.40 KW is added to the system which displaces peaking capacity.

The heat rate of the conventional plant before repowering is 9500 Btu/Kwh and of the peaking capacity displaced by the capacity added by repowering is 10500 Btu/Kwh.

Repowering reduces the heat rate of the repowered plant by 1000 Btu/Kwh to 8500 Btu/Kwh and the saving on the displaced peaking capacity is 2000 Btu/Kwh. (10500 - 8500).

Because of the improved heat rate the repowered plant would probably enjoy a higher load factor than the pre-existing conventional plant. For this comparison the probable better load factor is discounted and it is assumed that before and after repowering the energy output is the equivalent of 6000 full load hours per year of the conventional plant and 1500 full load hours per year of the peaking plant.

The fuel consumption before repowering per KW of the plant to be repowered is:

$6000 \times 9500 + .4 \times 1500 \times 10500 = 63.30 \times 10^6$ Btu/KwYr

Fuel is assumed to cost \$5.00 per $10^6$ Btu and the savings by repowering are given in table III.

TABLE III

| KW | | HOURS | | KWH | Btu/Kwh | Saving $10^6$Btu/Yr | Saving \$/Yr |
|---|---|---|---|---|---|---|---|
| .4 | x | 1500 | = | 600 | 2000 | 1.20 | 6.00 |
| 1.00 | x | 6000 | = | 6000 | 1000 | 6.00 | 30.00 |
| 1.4 | | | | 6600 | | 7.20 | 36.00 |

The fuel saving is thus 11.37% (= 7.20 x 100 ÷ 63.30)

If a 300 MW plant were repowered the annual fuel saving would be $2.16 \times 10^{12}$ Btu/Yr equivalent to 353000 barrels of oil worth 10.80 million per year.

Repowering is assumed to cost \$300 per incremental KW. The cost of new peaking capacity is approximately \$200/KW. Thus the net cost of repowering with credit for displaced peaking capacity is \$100 per incremental KW.

For each Kw of plant to be repowered the net cost is \$40 and the annual fixed charges are \$7.20 at an assumed 18 percent per year fixed charge rate.

Net annual savings are 36.00 - 7.20 =\$28.80

Average saving in revenue requirement is .44 cents/KWH on the 6600 KWH/Yr from table III.

If the utility has no need of, and no credit is given for, added capacity the additional capacity from repowering will be used to retire less efficient capacity and the fuel savings will be the same as in the last case. There will be no credit for displaced capacity and capital cost will be .40 x 300 = $120/ basic KW.

Annual fixed charges are 120 x .18 = $21.60

Annual savings are 36.00 - 21.60 =$14.40

Annual savings are 14.40 x 100 ÷ 6600 = .22 C/KWH

If it is assumed that the repowered plant is restricted to the same energy output as the preexisting conventional plant then the fuel savings are reduced to 6000 x 1000 x 5 ÷ $10^6$ = $30.00/Yr.

Capital cost of repowering would also be reduced but using the same cost as in the preceding examples the plant can still make an economic saving of 30.00 - 21.60 = $8.40/KwYr.

Repowering can effect savings in both fuel supply and revenue requirements under most forseeable circumstances as shown by the above scenarios.

## CLOSURE

Cost of premium fuels to utilities has increased by almost an order of magnitude in recent years. The cost of oil or gas now represents by far the major cost of power and justifies almost any measure to improve heat rate.

Repowering with combustion turbines is the only viable means of materially improving the heat rate of existing plants and deserves the serious attention of utilities.

Repowering also provides low cost capacity without the hassle of obtaining and gaining approval for, new sites and cooling water.

There can be no question that a lot of oil and gas is yet to be burned in power plants. Repowering has the potential of increasing by ten percent the kilowatt hours generated without increasing the quantity of oil consumed.

REFERENCES


1 Gerstin RA - A Technical and Economic Overview of the Benefit of Repowering ASME 75-GT-16

2 Combustion Turbine Repowering of Reheat Steam Power Plants EPRI FP-862, by Westinghouse. August 1978

3 Reduction of $NO_x$ Through Staged Combustion in Combined Cycle Supplemental Boilers EPRI 224 by KVB Engineering Inc. February 1975

Technical Information from:
Westinghouse Electric Corporation/Combustion Turbine Systems Division/P.O. Box 251/Concordville, PA

SA-11158